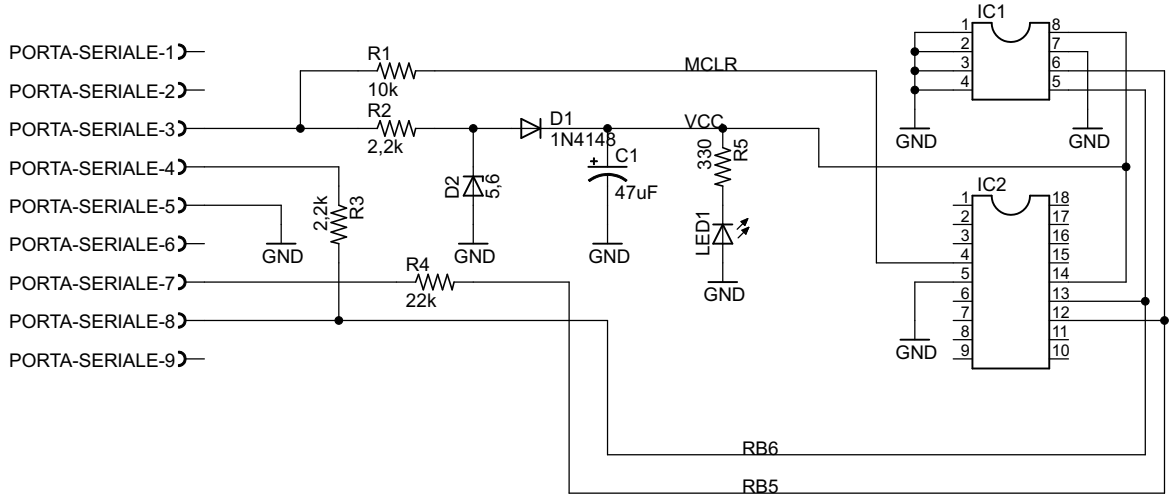

TITLE: Programmatore PIC-2

Document Number:

REV:

Date: 02/01/2013 22:46:04

Sheet: 1/1